V. Repair and maintenance

All repairs of the TWILIGHT SWITCH TS-21 are performed by the manufacturer. The device does not require any maintenance. When the sensor becomes contaminated, clean it with a clean, damp cloth. The device does not require any additional maintenance.

VI. Warranty Card

The manufacturer guarantees the correct operation of the TS-21 TWILIGHT SWITCH. The warranty period is 36 months from the date of sale. The warranty is extended by the time of repair. Warranty repairs are performed by the manufacturer free of charge after the AUTOMAT is delivered to the manufacturer. Improper use of the device or independent modifications to it will void the warranty.

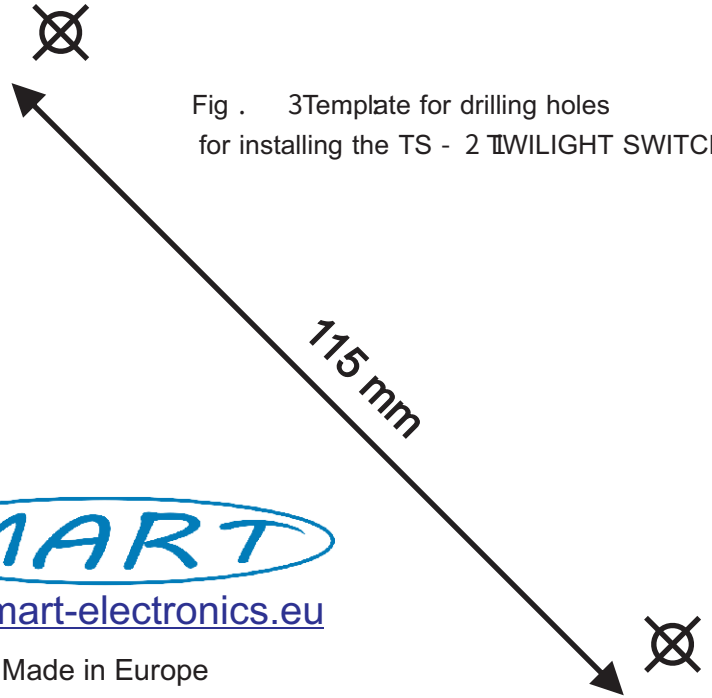

Fig . 3Template for drilling holes
for installing the TS - 2 TWILIGHT SWITCH .

www.mart-electronics.eu

Made in Europe

The TS-21 twilight switch meets the requirements of the European Union Directives
- Directive LVD 2014/35/UE - Low Voltage Directive of 26 February 2014
- Directive EMC 2014/30/UE - Eletromagnetic Compatibility Directive of 26 February 2014

In order to protect the environment, do not throw away used electrical appliances and electronics together with municipal waste. Used equipment should be delivered to collection points for recycling free of charge. Any information on this can be obtained at sellers, distributors, manufacturer or on the Internet. The product's packaging is made of ecological materials. The PVC packaging tape will be used while stocks last.

3-YEAR WARRANTY

TWILIGHT SWITCH

type TS-21

I. PURPOSE

The TS-21 TWILIGHT SWITCH is designed to automatically switch the receiver on at dusk and switch it off at dawn. Installation on a vertical surface, outdoors, in direct sunlight. Protection degree IP54.

II. PROPERTIES OF THE TS-21 TWILIGHT SWITCH

>> High switching power 16A (4000 W) 250VAC,

>> high inrush current (resistance to 100 A surge current)

>> precise logarithmic adjustment:

1 ... 10 lx - energy-saving compartment,

10 ... 100 lx - standard range,

100 ... 1000 lx - advertising switching range,

>> traffic lights (LED) informing about the operating status:

LED-1 - indication of 230V supply voltage on terminals 1,2,

LED-2 - signaling the presence of voltage on terminals 3,4,

LED-3 - signaling (without delay) of exceeding the set (set) lighting threshold,

>> quick assembly:

two screws for fixing to the wall,

cover mounted with "click" type latches.

The TS-21 TWILIGHT SWITCH uses a specialized OMRON G2RL-1-E-HR relay, designed to switch various lighting lamps. The special design enables effective switching of lamps with an inrush current of up to 100 A per pulse.

The receivers switched on by THE TS-21 TWILIGHT SWITCH can be:

>> outdoor lighting of buildings,

>> street lighting,

>> lighting of exhibitions, shop windows, various types of advertisements etc.

>> drivers in closing and opening systems for roller shutters and window blinds,

There are three LED diodes (LED-1, LED-2, LED-3) inside the TS-21 TWILIGHT SWITCH. There are two LEDs under the terminal strip. LED-1 indicates the presence of the supply voltage on the LN (1,2) terminals, LED-2 indicates the presence of voltage on the terminals 3,4.
LED-3 informs (without delay) about exceeding the activation threshold. After approx. 30 sec. the relay will be activated - 230VAC voltage will be activated on terminals3,4 and LED-2 will light up.

III. ASSEMBLY

The TS-21 TWILIGHT SWITCH device may only be connected by a person authorized to operate electrical installations. Remember to choose the right protection.
The housing is adapted for easy and quick fixing to the surface with two screws (stainless screws with expansion plugs are included in the set). The housing cover is removed in no time with a flat screwdriver Fig. 1.
After removing the TS-21 TWILIGHT SWITCH cover, four mounting clamps 1, 2, 3, 4 are available, as well as a description of electric wires connection and a knob for setting the activation threshold - Fig. 2 To facilitate the assembly, the manual includes a template that facilitates drilling mounting holes - Fig. 3.
After installing the TS-21 TWILIGHT SWITCH on a vertical wall, do the following:
- with the power supply off, connect the wires in accordance with the instructions,
- turn on the supply voltage - LED-1 will light up at terminals 1, 2,
- to check the correct operation, use a screwdriver to set the threshold, and when the current lighting level is exceeded, LED-3 will light up (without delay), and after 30 seconds the relay will turn on, turning on the receiver, which will be signaled by LED-2 at terminals 3, 4.
- using the scale, using the potentiometer knob, using a screwdriver, set the desired value of the switching on threshold,
- after checking, close the lid carefully,
- check the operation of the TS-21 TWILIGHT SWITCH in real conditions and possibly correct the setting.
In order to limit the impact of temporary large changes in lighting, e.g. car lamps, lightning flash, etc. on the operation of the TWILIGHT SWITCH, a delay of 30 seconds has been applied.
To check the operation of the TS-21 TWILIGHT SWITCH during the day, after its correct installation in accordance with the instructions, cover the sensor, wait about 30 seconds until the AUTOMAT turns on the lighting. When setting low values (below 100 lux), remember that on a sunny day, covering the sensor with your bare hand may not be sufficient. Then the SENSOR should be covered more effectively.
The most advantageous, from the point of view of energy efficiency, is to install the AUTOMAT on the eastern or south-eastern side, due to the early switch-off of the receiver at dawn, which reduces electricity costs and contributes to environmental protection.
CAUTION: Avoid mounting the TS-21 TWILIGHT SWITCH directly in the stream of lamp illumination, because lighting with the TS-21 TWILIGHT SWITCH lamp may interfere with operation - the lamp will periodically turn on and off from evening until morning.

Fig. 1 .: How to open the "click" cover

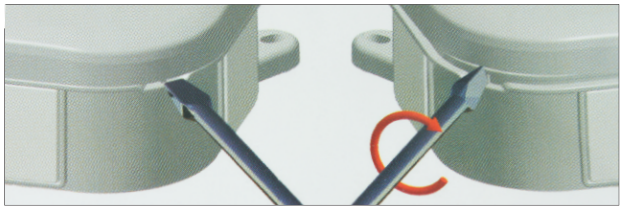

IV. Technical data

Rated supply voltage LN	230V AC, + 10%, - 15%
Rated frequency	50Hz
Maximum load current (power):	
> resistive load	16A, AC1 (4 000 W)
> incandescent lamps	10A (2 500 W)
> halogen lamps	8A (2 000 W)
> fluorescent lamps	8A (2 000 W)
> energy-saving lamps and LED	8A (2 000 W)
Instantaneous inrush current	100 A
Executive contacts	1 x NO
Rated power consumption	1 W
Logarithmic control range	1...10...100...1000 lx
Hysteresis	$E_{OFF} = 2E_{ON}$
Switch-on and switch-off delay	30s (± 20%)
Mechanical durability	100 000 operations
Protection level	IP 54
Working temperature	-25...+50 °C
Dimensions	92 x 92 x 44 mm
Weight	100g
Connecting cable	max 4 x 2,5 mm^2
Wall plugs (drill Φ 6mm)	6mm x 30 mm
Spacing mounting holes	115 mm
Working position	vertical
Meethod of assembly	surface mounted with two screws

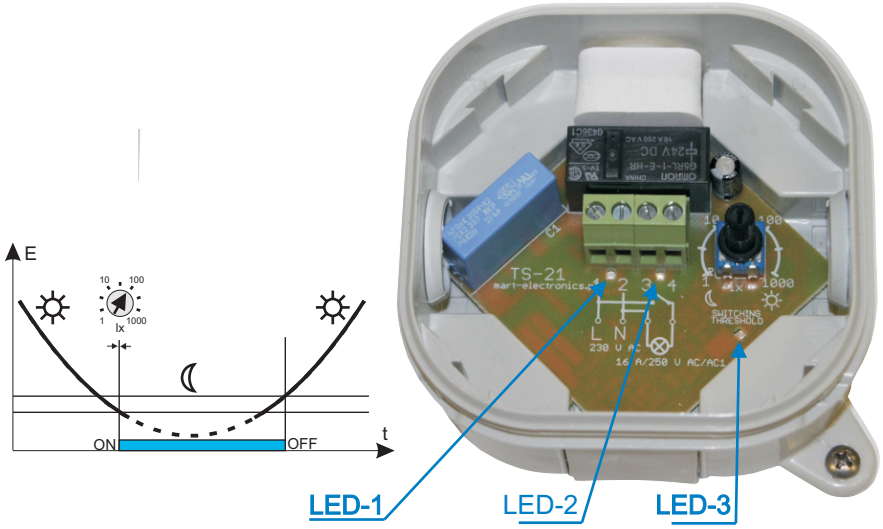

Fig. 2 .: Description of cable connections to the TS-21 TWILIGHT SWITCH visible after removing the cover.